REV.	DESCRIPTION	ECN NO.	NAME	DATE
1	NEW FRAME	N/A	JING	2020-08-12

ALL PARTS MUST MEET TO RoHS REQUIREMENTS

REMARKS:
1.ADDS SIZE: 11.8 mm
2.CONTACT PIN TO CAPTIVE

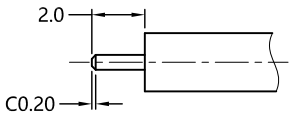

RECOMMENDED CABLE STRIPPING DIM'S

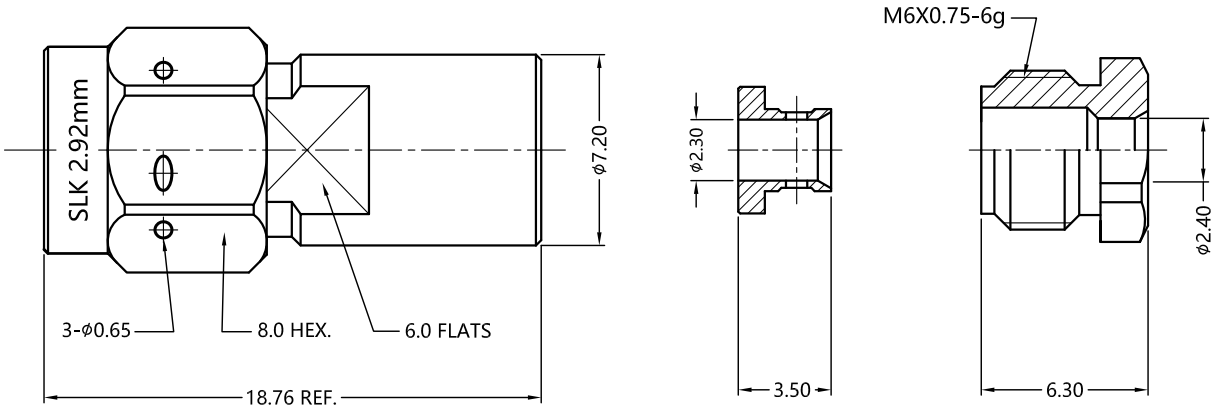

MATERIALS AND PLATING UNIT: MICRO-INCHES		
PART NAME	MATERIALS	PLATING
BODY/SHELL	STAINLESS STEEL	PASSIVATION
INSULATOR	PEI	N/A
CONTACT PIN	BRASS	GOLD 50u"/NICKEL/COPPER
FERRULE	BRASS	GOLD 10u"/NICKEL/COPPER
BARREL	STAINLESS STEEL	PASSIVATION

ELECTRICAL CHARACTERISTICS		
IMPEDANCE		50 Ω
VOLTAGE RATING		335 V(rms)
FREQUENCY RANGE		0 ~ 40 GHz
DIELECTRIC WITHSTANDING VOLTAGE		>500 V
CONTACT RESISTANCE	CENTER CONTACT	<3.0 mΩ
	OUTER CONTACT	<2.0 mΩ
INSULATION RESISTANCE		>5000 MΩ
INSERTION LOSS		According to the cable
RF-LEAKAGE		N/A
VSWR		<1.20
3RD INTERMODULATION		N/A

MECHANICAL CHARACTERISTICS	
FORCE TO ENGAGE AND DISENGAGE	N/A
CENTER CONTACT RETENTION FORCE	>6 lbs
RECOMMENDED COUPLING TORQUE	7-10 in-lbs
COUPLING NUT RETENTION FORCE	>60 lbs
DURABILITY	>500 cycles

ENVIRONMENTAL PARAMETER	
TEMPERATURE RANGE	-55 ℃~+125 ℃

* CUSTOMER OUTLINE DRAWING

UNLESS OTHERWISE SPECIFIED:
1) EDGES : C0.15 MAX ;
2) REMOVE ALL BURRS ;
3) SURFACE ROUGHNESS : Ra1.6 ;
4) UNITS : mm ;
5) DIMENSIONS TOLERANCES
DECIMALS : .x ±0.3 .xx ±0.2 .xxx±0.1;
ANGLES : ± 5°.

THIRD ANGLE PROJECTION

APPROVED :	CUSTOMER P/N : -
CHECKED :	SCALE : 3 : 1
DRAWING : JING	DATE : 2020-08-12
	PAGE : 1/1

SUPERLINK

TITLE : 2.92mm MALE S/T SLODER FOR SLD-086 CABLE, 50Ω

DRAWING NO. : 5P9M15S-A471-001

COMPANY WEBSITE : www.slkcorp.com