REV.	DESCRIPTION	ECN NO.	NAME	DATE
A2	NEW FRAME	N/A	GUO	2020-08-15

ALL PARTS MUST MEET TO RoHS REQUIREMENTS

REMARKS:
CONTACT PIN TO SOLDER
CRIMPED FERRULE HEX. CRIMP SIZE .213"

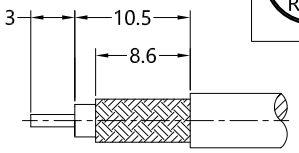

RECOMMENDED CABLE STRIPPING DIM'S

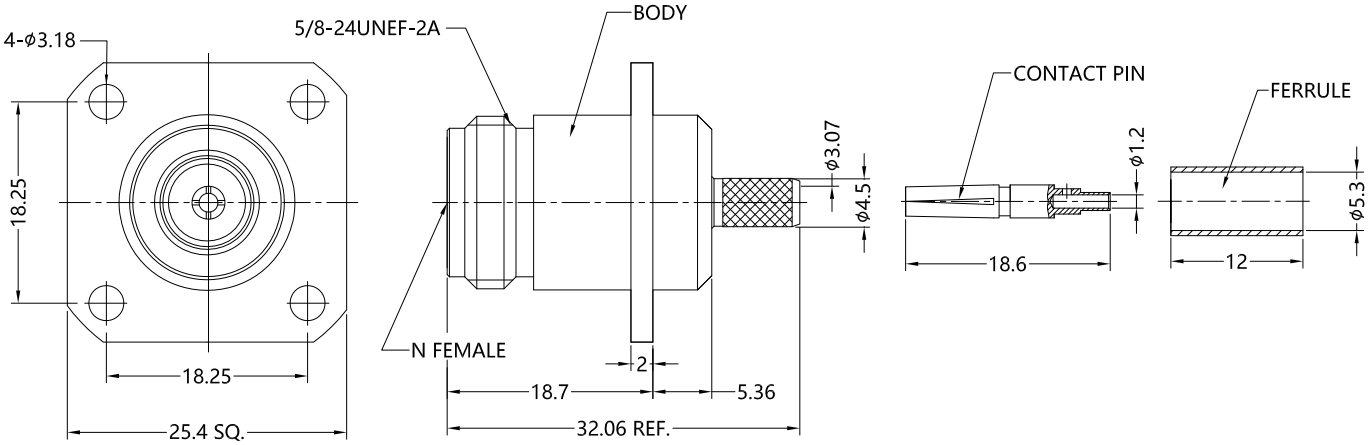

MATERIALS AND PLATING UNIT: MICRO-INCHES

PART NAME	MATERIALS	PLATING
BODY/NUT	BRASS C3604	NICKEL PL.100 u"/COPPER
INSULATOR	TEFLON MIL-P-19468	N/A
CONTACT PIN	PHOSPHOR BRONZE	GOLD PL.10 u"/NICKEL/COPPER
FERRULE	COPPER T2	NICKEL PL.100 u"/COPPER
GASKET	SILICONE	N/A

ELECTRICAL CHARACTERISTICS

IMPEDANCE		50 Ω
VOLTAGE RATING		750 V(rms)
FREQUENCY RANGE		0 ~ 2.2 GHz
DIELECTRIC WITHSTANDING VOLTAGE		>1000 V
CONTACT RESISTANCE	CENTER CONTACT	<1.5 mΩ
	OUTER CONTACT	<1.0 mΩ
INSULATION RESISTANCE		>5000 MΩ
INSERTION LOSS		ACCORDING AS THE CABLE
VSWR		N/A
3RD INTERMODULATION		N/A

MECHANICAL CHARACTERISTICS

FORCE TO ENGAGE AND DISENGAGE	<6 lbs
CENTER CONTACT RETENTION FORCE	>6 lbs
RECOMMENDED COUPLING TORQUE	N/A
COUPLING NUT RETENTION FORCE	N/A
DURABILITY	>500 cycles

ENVIRONMENTAL PARAMETER

TEMPERATURE RANGE	-55 ℃~+155 ℃
THERMAL SHOCK	US MIL- STD 202, Meth. 107, Cond. B
VIBRATION	US MIL- STD 202, Meth. 204, Cond. B
SHOCK	US MIL- STD 202, Meth. 213, Cond. I
CLIMATIC CLASS	IEC 60068 65/165/21

* CUSTOMER OUTLINE DRAWING

UNLESS OTHERWISE SPECIFIED:
1) EDGES : C0.15 MAX ;
2) REMOVE ALL BURRS ;
3) SURFACE ROUGHNESS : Ra1.6 ;
4) UNITS : mm ;
5) DIMENSIONS TOLERANCES
DECIMALS : .x ±0.3 .xx ±0.2 .xxx±0.1;
ANGLES : ± 5°.

THIRD ANGLE PROJECTION

APPROVED :	CUSTOMER P/N : -
CHECKED :	SCALE : 3:2
DRAWING : GUO	DATE : 2020-08-15
	PAGE : 1/1

SLK SUPERLINK

TITLE : N FEMALE S/T SOLDER FOR RG-58A/U CABLE,50Ω

DRAWING NO. : 5NCF45S-A41-001

COMPANY WEBSITE : www.slkcorp.com