REV.	DESCRIPTION	ECN NO	NAME	DATE
0	FRIST EDITION	N/A	HRWEI	2020-04-20
1	Update the plating	N/A	HRWEI	2020-04-22
2	Update the drawing	N/A	HRWEI	2020-05-25

ALL PARTS MUST MEET TO RoHS REQUIREMENTS

REMARKS:
1.CONTACT PIN TO SOLDER
2.ADDS SIZE: 5.06mm
3.CRIMPED FERRULE HEX. CRIMP SIZE .093" 2

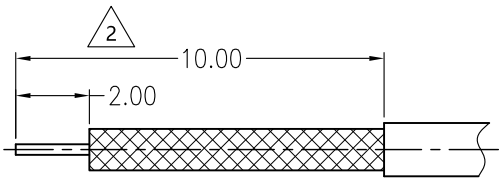

RECOMMENDED
CABLE STRIPPING DIM'S

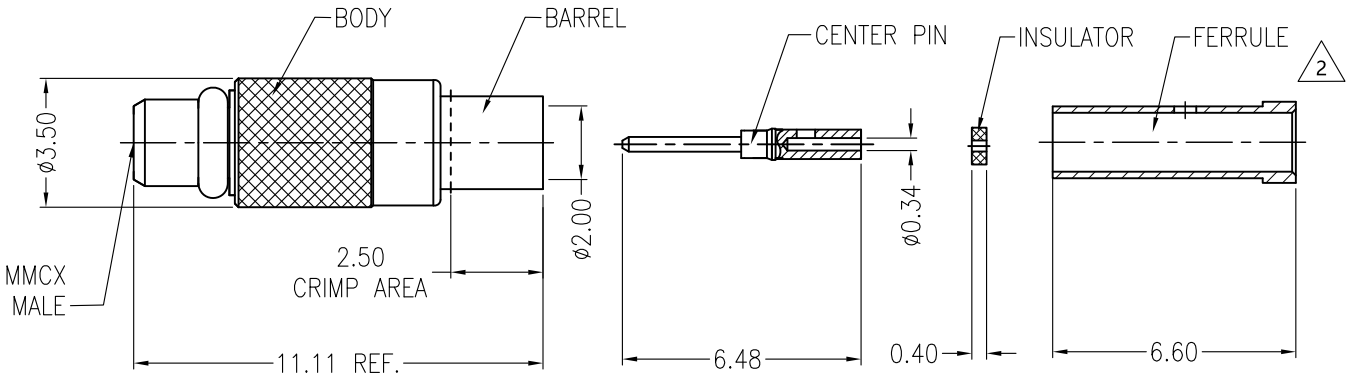

MATERIALS AND PLATING		UNIT: MICRO-INCHES
BODY	BRASS C3604	GOLD 15 u"/NICKEL/COPPER 1
CONTACT PIN	BRASS C3604	GOLD 50 u"/NICKEL/COPPER 1
INSULATOR	PTFE ASTM-D-1710	N/A
FERRULE	BRASS C3604	GOLD 3 u"/NICKEL/COPPER 1

ELECTRICAL CHARACTERISTICS		
Impedance		50 Ω
Voltage rating		N/A
Frequency range		0 ~ 6 GHz
Dielectric withstanding voltage		>500 V
Contact resistance	Center contact	<5.0 mΩ
	Outer contact	<2.5 mΩ
Insulation resistance		>1000 MΩ
Insertion loss		N/A
RF- leakage		N/A
VSWR		<1.20 2
3rd Intermodulation		N/A

MECHANICAL CHARACTERISTICS	
Force to engage and disengage	N/A
Center contact retention force	>4 lbs
Recommended coupling torque	N/A
Coupling nut retention force	>10 lbs
Durability	>500 cycles

ENVIRONMENTAL CHARACTERISTICS	
Temperature range	-40℃~+125 ℃

*CUSTOMER OUTLINE DRAWING

UNLESS OTHERWISE SPECIFIED:
1) C0.15 MAX;
2) REMOVE ALL BURRS;
3) SURFACE ROUGHNESS : Ra1.6;
4) UNITS:mm;
5) DIMENSIONS TOLERANCES
DECIMALS .x ±0.3 .xx ±0.2 .xxx±0.1
ANGLES ±5°

THIRD ANGLE PROJECTION

APPROVED:	CUSTOMER P/N: 3190-6783
CHECKED:	SCALE: 1:1
DRAWING:	DATE: 2020-05-22

SLK SUPERLINK

TITLE: MMCX MALE S/T FOR TFLEX-047 CABLE

DRAWING NO: 5MCM15S-A405

COMPANY WEBSITE: www.slkcorp.com

CUSTOMER OUTLINE DRAWING