REV.	DESCRIPTION	ECN NO.	NAME	DATE
0	FIRST EDITION	N/A	Fang	2019-03-14
1	UPDATE DRAWING	N/A	PY	2020-05-28

RoHS

ALL PARTS MUST MEET TO RoHS REQUIREMENTS

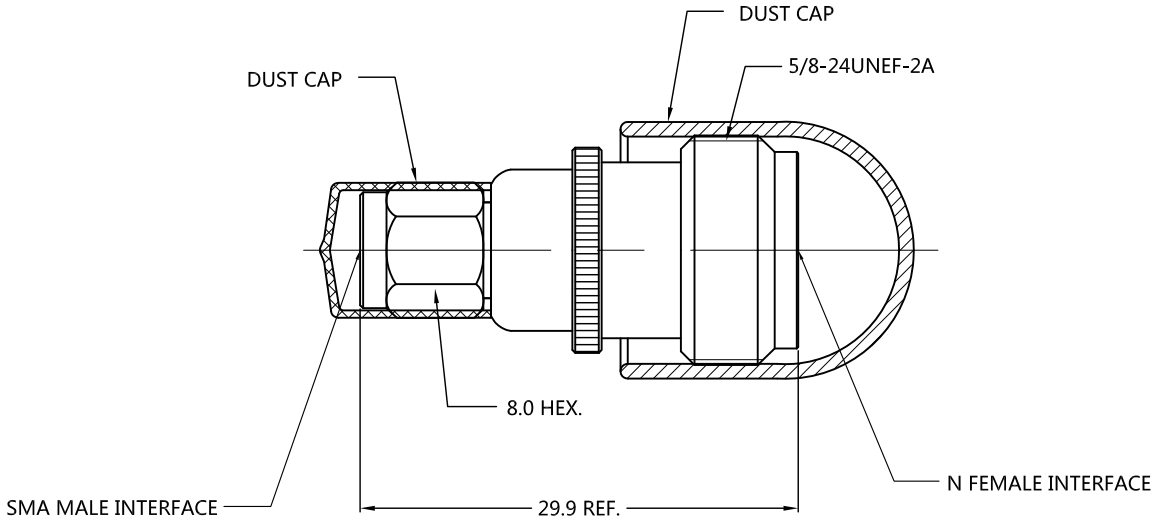

MATERIALS AND PLATING UNIT: MICRO-INCHES

PART NAME	MATERIALS	PLATING
BODY(SMA)	BRASS C3604	GOLD/NICKEL/COPPER
INSULATOR	PTFE MIL-P-19468	N/A
CONTACT PIN	BERYLLIUM COPPER	GOLD /COPPER
DUST CAP	PVC	BLACK
SHELL/BODY (N)	BRASS C3604	ALBALOY /COPPER

ELECTRICAL CHARACTERISTICS

IMPEDANCE		50 Ω
VOLTAGE RATING		175 V(rms)
FREQUENCY RANGE		0 ~ 12.4 GHz
DIELECTRIC WITHSTANDING VOLTAGE		>500 V
CONTACT RESISTANCE	CENTER CONTACT	<3.0 mΩ
	OUTER CONTACT	<2.0 mΩ
INSULATION RESISTANCE		>5000 MΩ
INSERTION LOSS		N/A
VSWR		<1.2 @0~ 12.4 GHz
3RD INTERMODULATION		N/A

MECHANICAL CHARACTERISTICS

FORCE TO ENGAGE AND DISENGAGE	N/A
CENTER CONTACT RETENTION FORCE	>6 lbs
RECOMMENDED COUPLING TORQUE	7-10 in-lbs
COUPLING NUT RETENTION FORCE	>60 lbs MIN.
DURABILITY	>500cycles

ENVIRONMENTAL PARAMETER

TEMPERATURE RANGE	-40 ℃~+85 ℃

* CUSTOMER OUTLINE DRAWING

UNLESS OTHERWISE SPECIFIED:
1) EDGES : C0.15 MAX ;
2) REMOVE ALL BURRS ;
3) SURFACE ROUGHNESS : Ra1.6 ;
4) UNITS : mm ;
5) DIMENSIONS TOLERANCES
DECIMALS : .x ±0.3 .xx ±0.2 .xxx±0.1;
ANGLES : ± 5°.

THIRD ANGLE PROJECTION

APPROVED :	CUSTOMER P/N : -
CHECKED :	SCALE : 1 : 1
DRAWING : PY	DATE : 2020-05-07
	PAGE : 1/1

SLK SUPERLINK

TITLE : SMA MALE TO N FEMALE ADAPTER

DRAWING NO. : 5MAM06S-NCF-008

COMPANY WEBSITE : www.slkcorp.com