REV.	DESCRIPTION	ECN NO.	NAME	DATE
0	FIRST EDITION	N/A	YY	2012-12-27
1	NEW FRAME	N/A	LEI CHAO	2020-08-12

ALL PARTS MUST MEET TO RoHS REQUIREMENTS

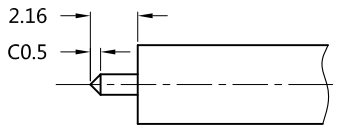

RECOMMENDED CABLE STRIPPING DIM'S

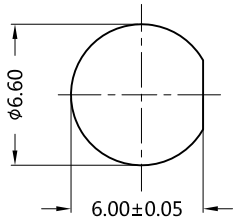

RECOMMENDED MOUNTING HOLE

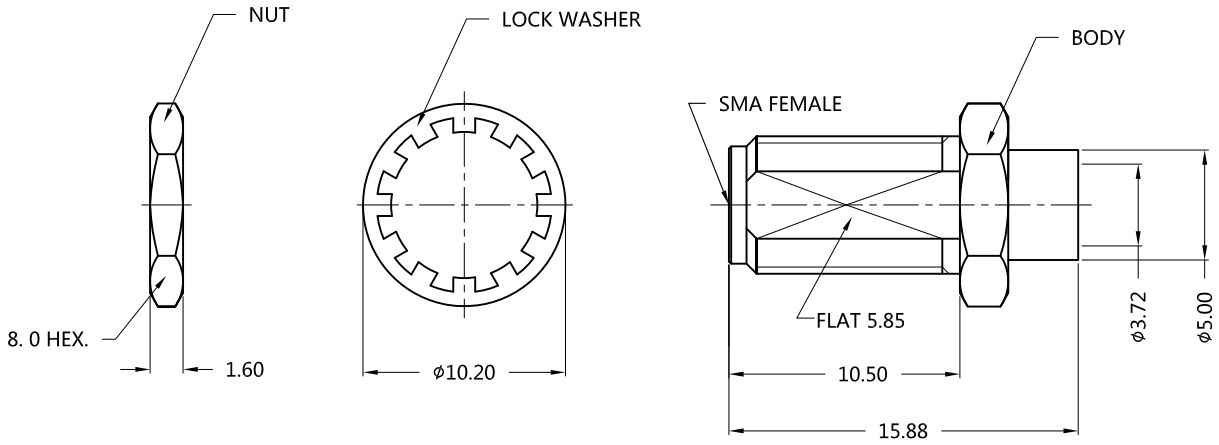

MATERIALS AND PLATING UNIT: MICRO-INCHES

PART NAME	MATERIALS	PLATING
BODY	BRASS C3604	GOLD 3 u"/NICKEL/COPPER
INSULATOR	TEFLON MIL-P-19468	N/A
CONTACT PIN	Be-Cu C17300	GOLD 10 u"/NICKEL/COPPER
NUT	BRASS C3604	GOLD 3 u"/NICKEL/COPPER
LOCK WASHER	BRASS	GOLD 3 u"/NICKEL/COPPER

ELECTRICAL CHARACTERISTICS

IMPEDANCE		50 Ω
VOLTAGE RATING		170 V(rms)
FREQUENCY RANGE		DC ~ 13.5 GHz
DIELECTRIC WITHSTANDING VOLTAGE		>500 V
CONTACT RESISTANCE	CENTER CONTACT	<3.0 mΩ
	OUTER CONTACT	<2.0 mΩ
INSULATION RESISTANCE		>5000 MΩ
INSERTION LOSS		According to the cable
Return loss		> 21dB@5.7-8.5 GHz > 19dB@10.1-13.5 GHz

MECHANICAL CHARACTERISTICS

CABLE RETENTION FORCE	N/A
CENTER CONTACT RETENTION FORCE	N/A
RECOMMENDED COUPLING TORQUE	N/A
COUPLING NUT RETENTION FORCE	N/A
DURABILITY	>500 cycles

ENVIRONMENTAL PARAMETER

TEMPERATURE RANGE	-55 ℃~+125 ℃
RELATIVE HUMIDITY	MIL-STD-202,Method 106
VIBRATION	MIL-STD-202,Method 204,Cond D
SHOCK	MIL-STD-202,Method 213,Cond I
CORROSION	MIL-STD-202,Method 101,Cond B

* CUSTOMER OUTLINE DRAWING

UNLESS OTHERWISE SPECIFIED:
1) EDGES : C0.15 MAX ;
2) REMOVE ALL BURRS ;
3) SURFACE ROUGHNESS : Ra1.6 ;
4) UNITS : mm ;
5) DIMENSIONS TOLERANCES
DECIMALS : .x ±0.3 .xx ±0.2 .xxx±0.1;
ANGLES : ± 5°.

THIRD ANGLE PROJECTION

APPROVED :	CUSTOMER P/N : -
CHECKED :	SCALE : -
DRAWING :	DATE : 2020-08-12
	PAGE : 1/1

SUPERLINK

TITLE : SMA FEMALE S/T SOLDER FOR FLEXIFORM402NM FL CABLE, 50Ω

DRAWING NO. : 5MAF15S-S02-012

COMPANY WEBSITE : www.slkcorp.com